Información del motor

Esta es la información técnica del motor.

https://www.letrika.mahle.com/katalog/letrikaletrika.html?lang=E&tab=0&koda=IM7027

Technical Data

Product	Motor
Letrika P/N	**IM7027**
Voltage	30 V
Power	3.3 kW
OEM P/N	11.217.094
MAHLE P/N	**MM 348**
Description	AMT7121
No. of revolutions	4,800/min
Rotation	⇔
S1	
S2	60 min
S3	
Mass	25 kg
Flange	Customer design
Termo protection	Yes
Ventilation	No

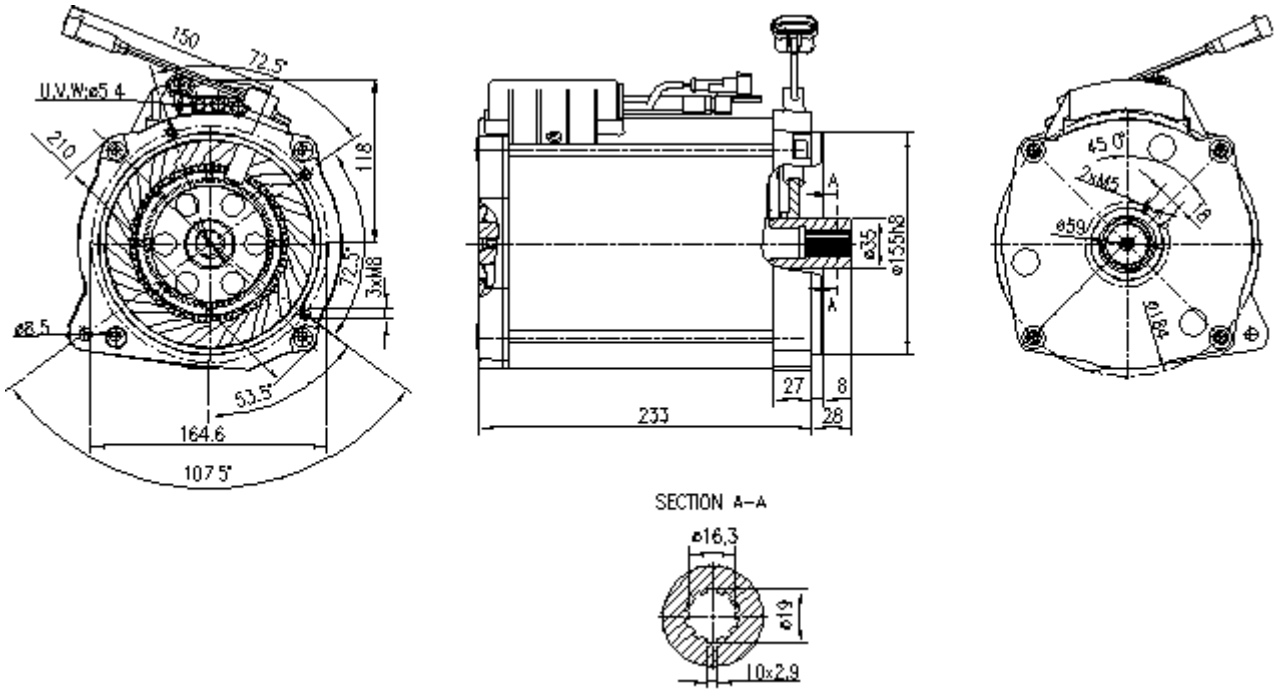



Revision #3
Created 25 February 2026 23:02:26 by Rafael Carbonell Lázaro
Updated 12 June 2026 12:07:49 by Rafael Carbonell Lázaro